C-ABU

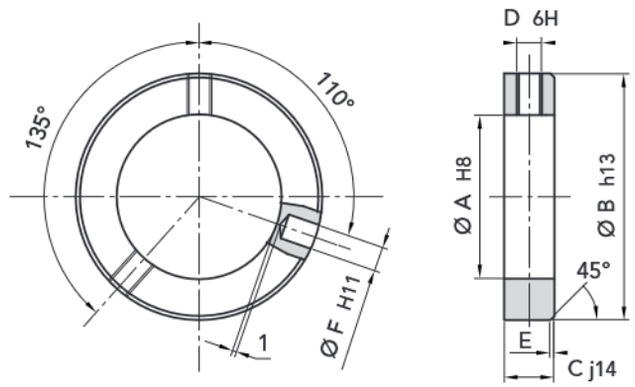

TYPE	PHOSPHATED P. NUMBER	GALVANISED P. NUMBER	INOX P. NUMBER	Ø A	Ø B	C	Ø D	E	Ø F	PACKAGES INOX FROM	PACKAGES PHOSP.-GALV. FROM	WEIGHT PACKAGE Kg
C-ABU 6	27100006	27200006	27700006	6	12	8	M4	0,8	1,5	10	25	0,40
C-ABU 8	27100008	27200008	27700008	8	16	8	M4	0,8	2	10	25	0,80
C-ABU 10	27100010	27200010	27700010	10	20	10	M5	1	3	10	25	1,50
C-ABU 12	27100012	27200012	27700012	12	22	12	M6	1,2	4	10	25	2,00
C-ABU 14	27100014	27200014	-	14	25	12	M6	1,2	4	-	25	2,70
C-ABU 15	27100015	27200015	27700015	15	25	12	M6	1,2	4	5	20	2,50
C-ABU 16	27100016	27200016	27700016	16	28	12	M6	1,2	4	5	20	3,50
C-ABU 17	27100017	27200017	27700017	17	28	12	M6	1,2	4	5	20	3,00
C-ABU 18	27100018	27200018	-	18	32	14	M6	1,4	5	-	20	5,40
C-ABU 20	27100020	27200020	27700020	20	32	14	M6	1,4	5	5	20	4,80
C-ABU 25	27100025	27200025	27700025	25	40	16	M8	1,6	6	5	20	4,25
C-ABU 30	27100030	27200030	27700030	30	45	16	M8	1,6	6	2	10	5,00
C-ABU 35	27100035	27200035	27700035	35	56	16	M8	1,6	8	2	10	8,60
C-ABU 40	27100040	27200040	27700040	40	63	18	M10	1,8	8	2	10	12,00
C-ABU 45	27100045	27200045	-	45	70	18	M10	1,8	8	-	10	13,50
C-ABU 50	27100050	27200050	27700050	50	80	18	M10	1,8	10	-	-	22,00
C-ABU 60	27100060	27200060	-	60	90	20	M10	2	10	-	-	26,40
C-ABU 70	27100070	27200070	-	70	100	20	M10	2	10	-	-	28,75

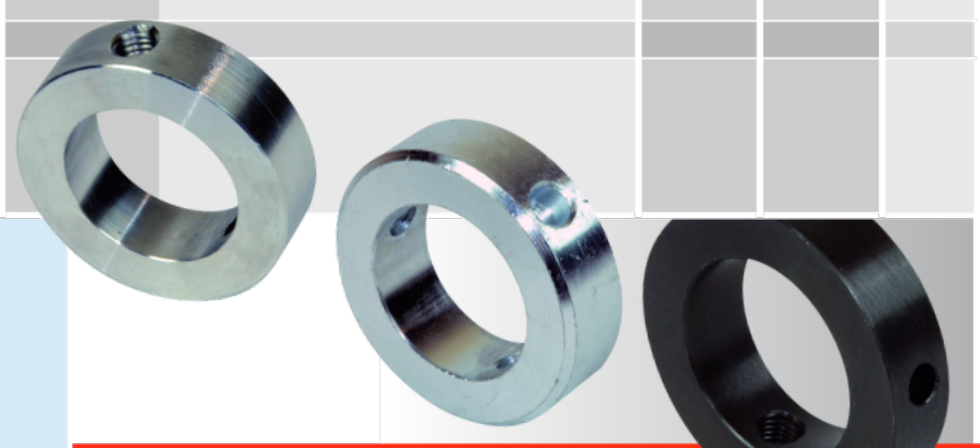

MATERIAL C 45 UNI 7845
PHOSPHATED
GALVANISED
INOX AISI 304

CAD drawings available on our site
www.chiaravalli.com

Quantity, availability and prices on B2B Chiaravalli